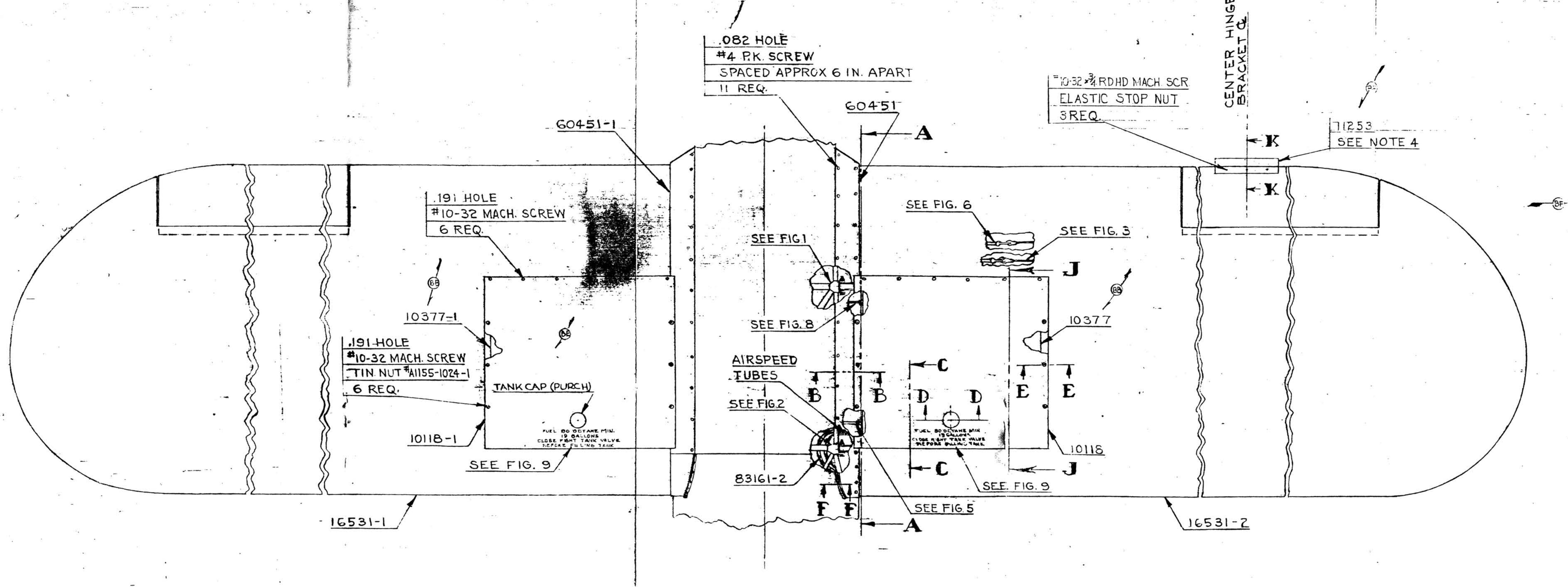
.082 HOLE
#4 P.K. SCREW
SPACED APPROX 6 IN. APART
11 REQ.
60451
60451-1
A
#10-32 x 3/4 RDHD MACH. SCR
ELASTIC STOP NUT
3 REQ.
CENTER HINGE BRACKET ℄
K
11253
SEE NOTE 4
.191 HOLE
#10-32 MACH. SCREW
6 REQ.
SEE FIG. 6
SEE FIG 1
SEE FIG. 3
J
10377-1
10377
SEE FIG. 8
.191 HOLE
#10-32 MACH. SCREW
TIN. NUT #A1155-1024-1
6 REQ.
TANK CAP (PURCH)
AIRSPEED TUBES
B
C
D
E
SEE FIG 2
FUEL 80 OCTANE MIN. 19 GALLONS CLOSE RIGHT TANK VALVE BEFORE FILLING TANK
10118-1
10118
83161-2
SEE FIG. 9
F
SEE FIG 5
16531-1
16531-2

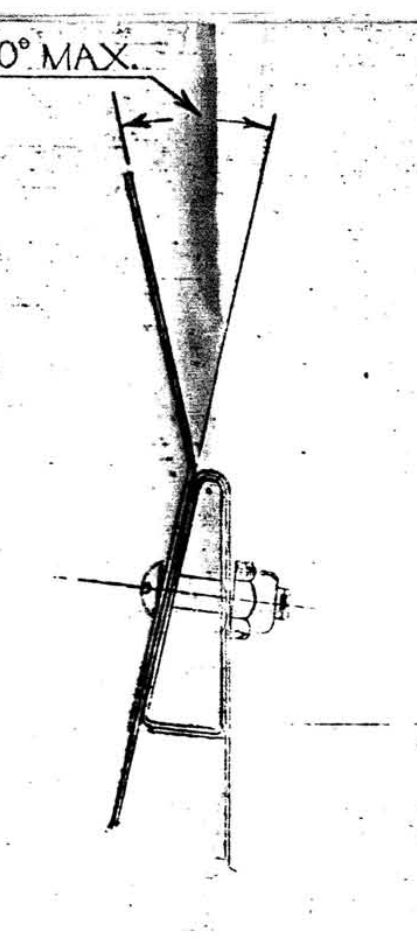

SECTION K-K
FULL SIZE

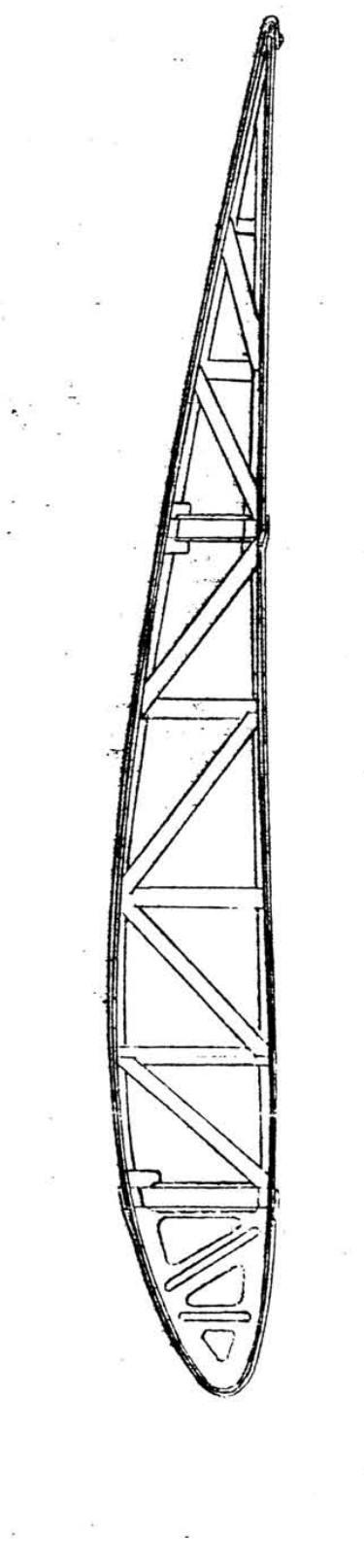

SECTION A-A
OVERLAP OF FAIRINGS
1/2" = 1 FT.

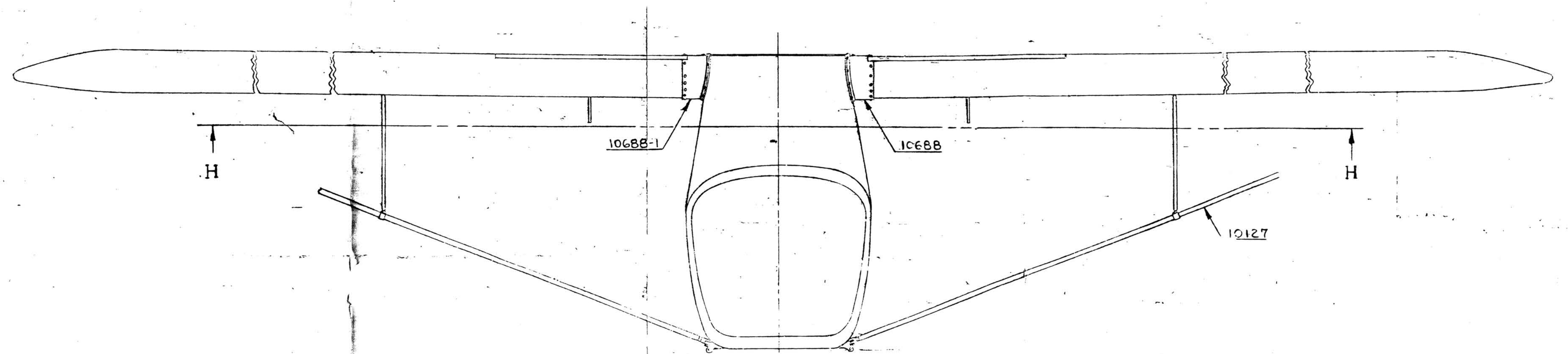
H
10688-1
10688
10127

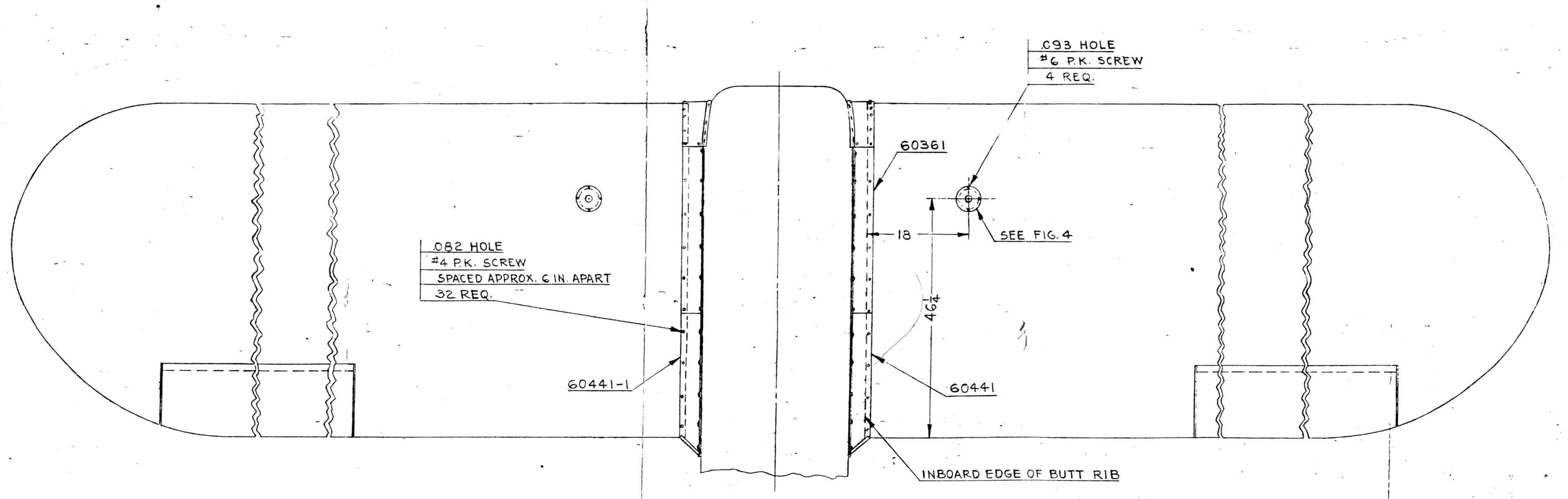
.093 HOLE
#6 P.K. SCREW
4 REQ.
60361
18
SEE FIG. 4
.082 HOLE
#4 P.K. SCREW
SPACED APPROX. 6 IN. APART
32 REQ.
46 1/4
60441-1
60441
INBOARD EDGE OF BUTT RIB

SECTION H-H

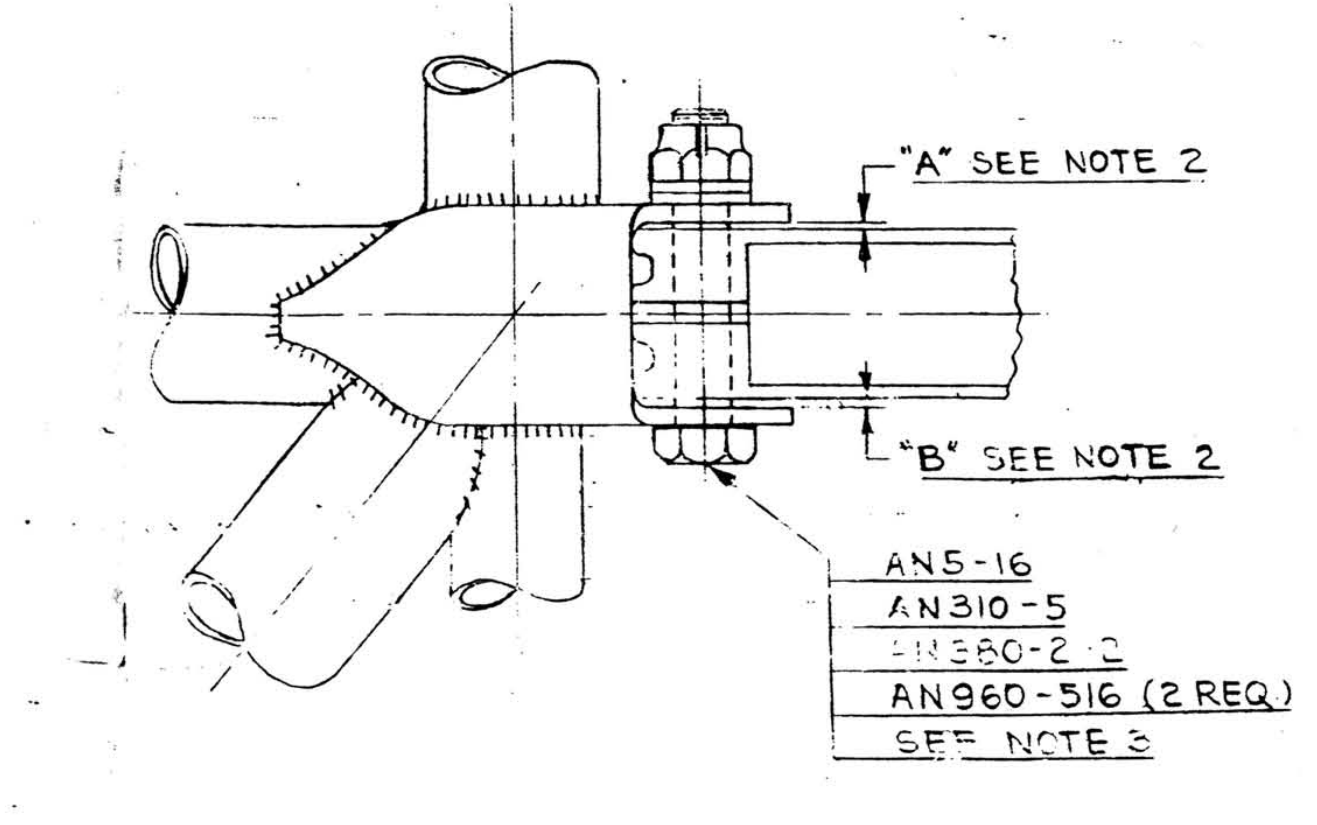
"A" SEE NOTE 2
"B" SEE NOTE 2
AN5-16
AN310-5
AN380-2-2
AN960-516 (2 REQ.)
SEE NOTE 3

FIG. 1
WING ATTACHMENT AT REAR SPAR
FULL SIZE

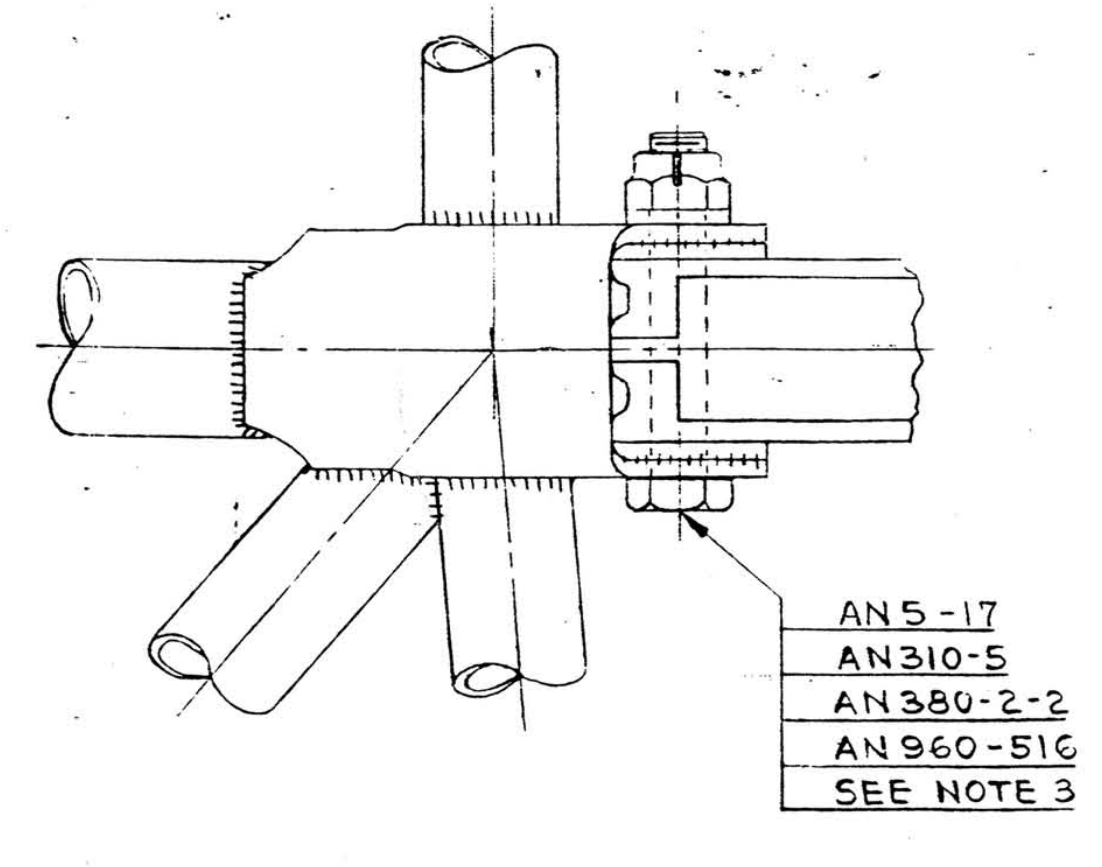
AN5-17
AN310-5
AN380-2-2
AN960-516
SEE NOTE 3

FIG. 2
WING ATTACHMENT AT FRONT SPAR
FULL SIZE

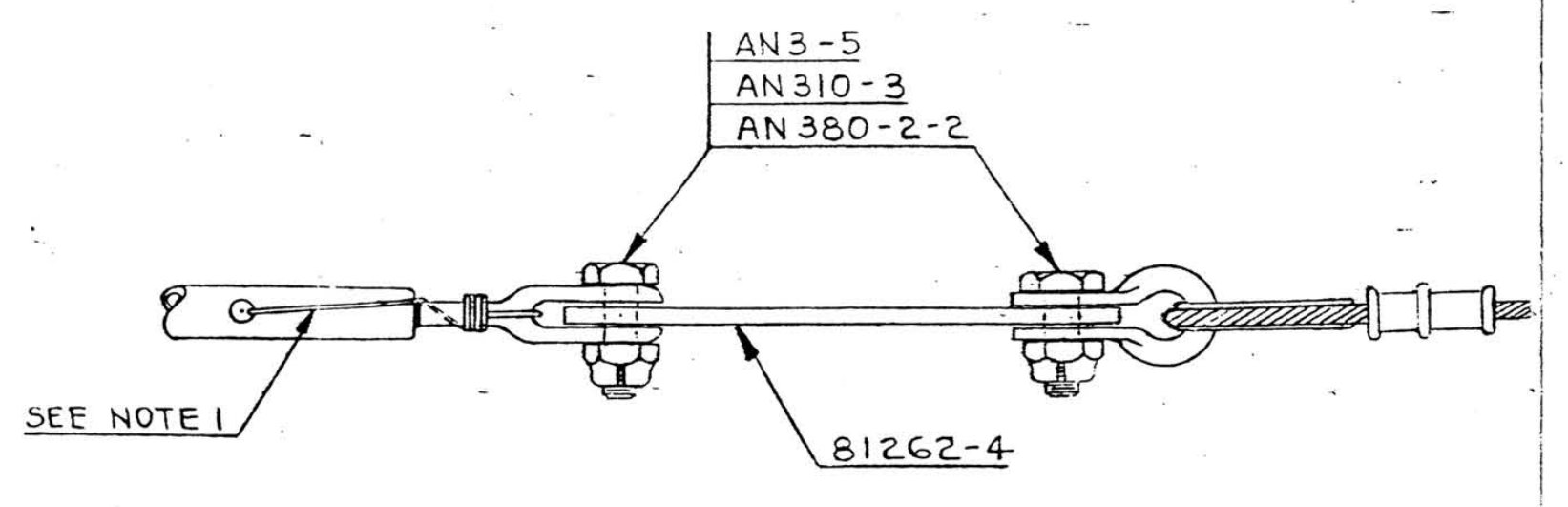
AN3-5
AN310-3
AN380-2-2
SEE NOTE 1
81262-4

FIG. 3
AILERON CABLE CONNECTION
FULL SIZE

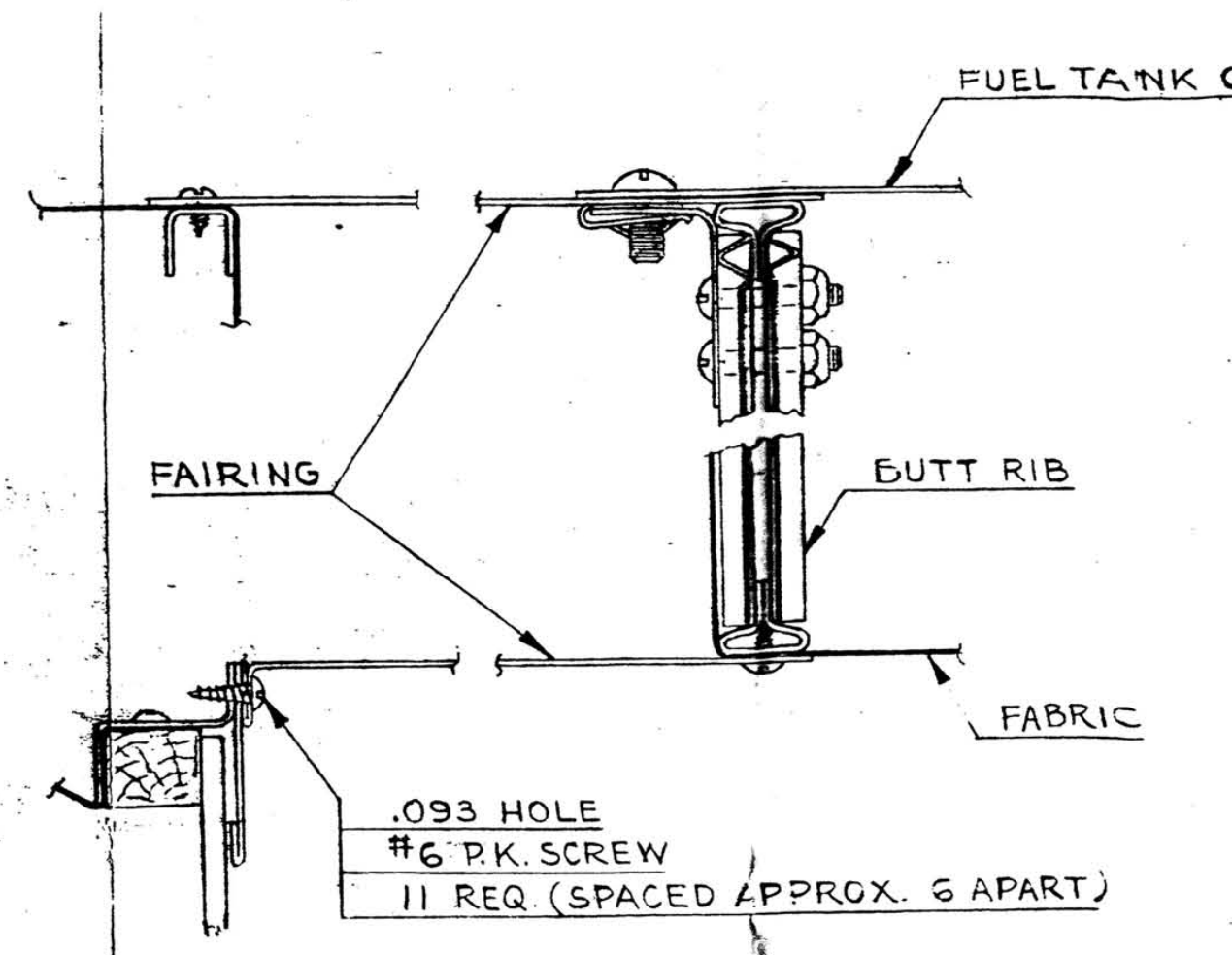
FUEL TANK COVER
FAIRING
BUTT RIB
FABRIC
.093 HOLE
#6 P.K. SCREW
11 REQ. (SPACED APPROX. 6 APART)

SECTION B-B
FULL SIZE

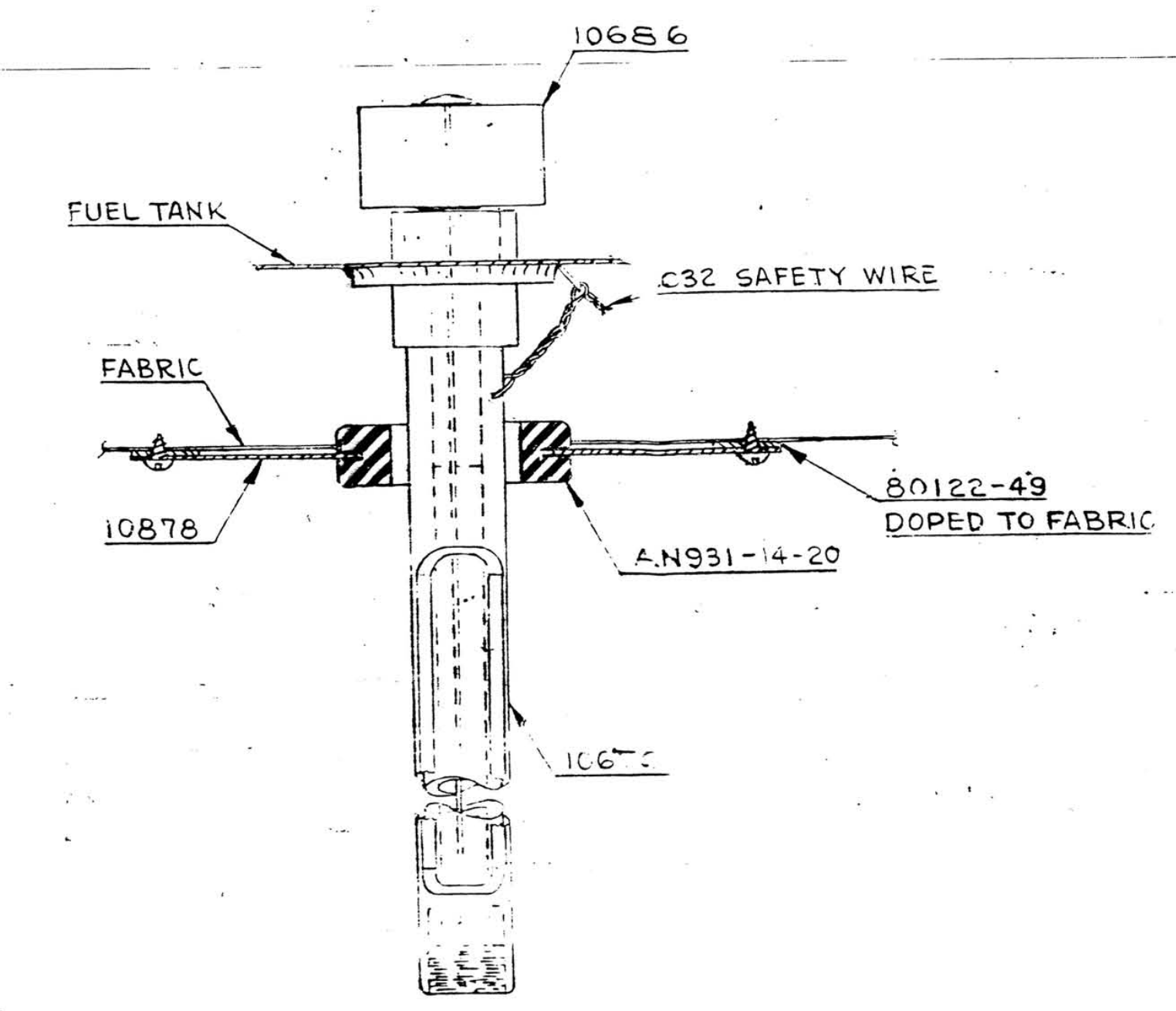
10686
FUEL TANK
.032 SAFETY WIRE
FABRIC
10878
80122-49
DOPED TO FABRIC
AN931-14-20
10676

FIG. 4
FUEL GAGE INSTALLATION
FULL SIZE

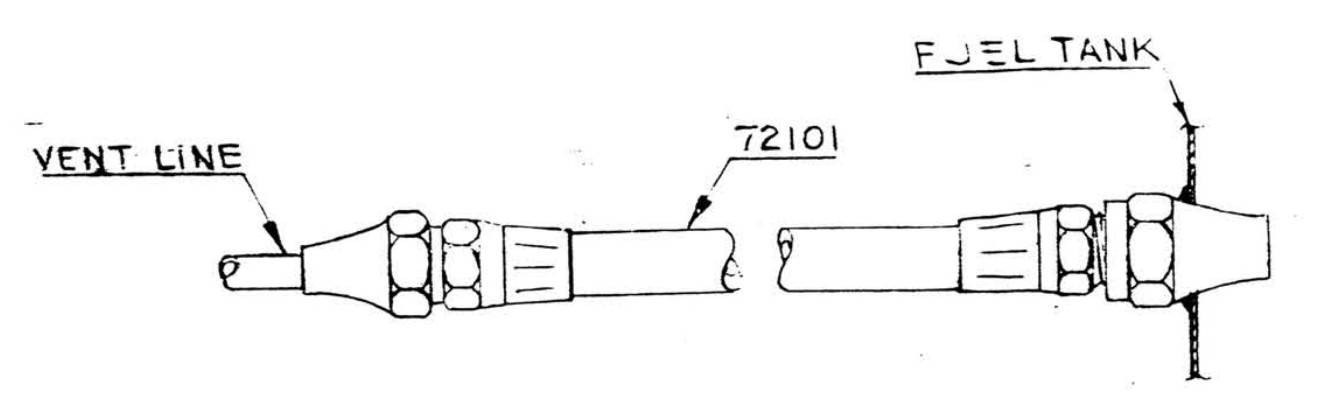
VENT LINE
72101
FUEL TANK

FIG. 5
VENT LINE CONNECTION
FULL SIZE

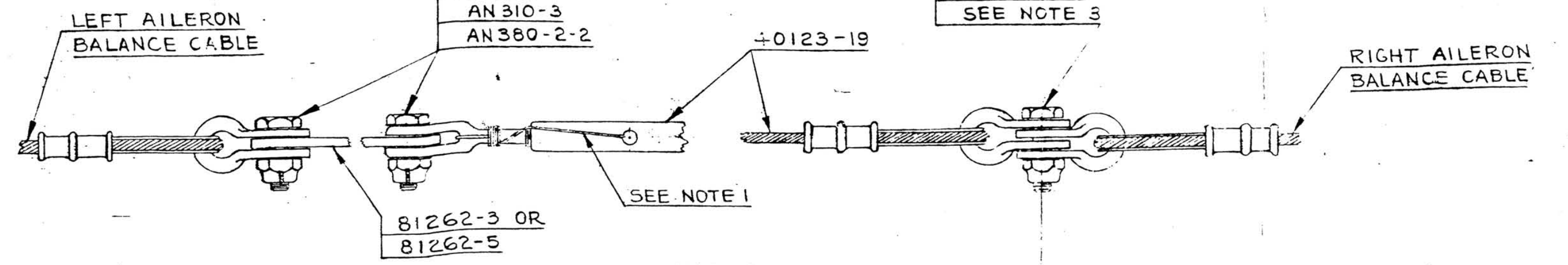
LEFT AILERON BALANCE CABLE
AN3-5
AN310-3
AN380-2-2
40123-19
AN3-6
AN310-3
AN380-2-2
SEE NOTE 3
RIGHT AILERON BALANCE CABLE
81262-3 OR 81262-5
SEE NOTE 1

FIG. 6
AILERON CENTER BALANCE CABLE INST.
FULL SIZE

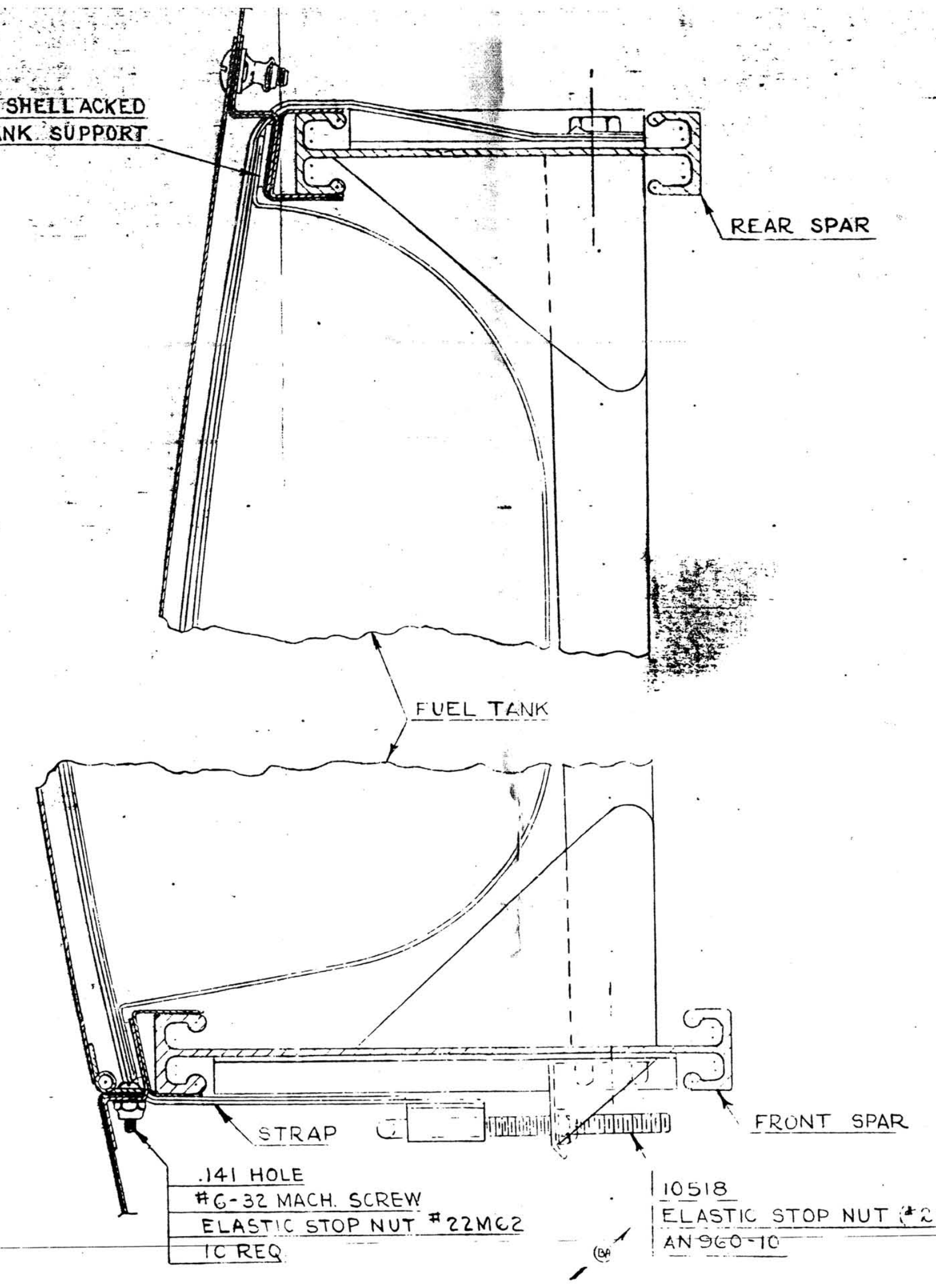
86082-26 SHELLACKED TO FUEL TANK SUPPORT
REAR SPAR
FUEL TANK
STRAP
FRONT SPAR
.141 HOLE
#6-32 MACH. SCREW
ELASTIC STOP NUT #22M62
10 REQ.
10518
ELASTIC STOP NUT (#22M02)
AN960-10

SECTION J-J
FULL SIZE

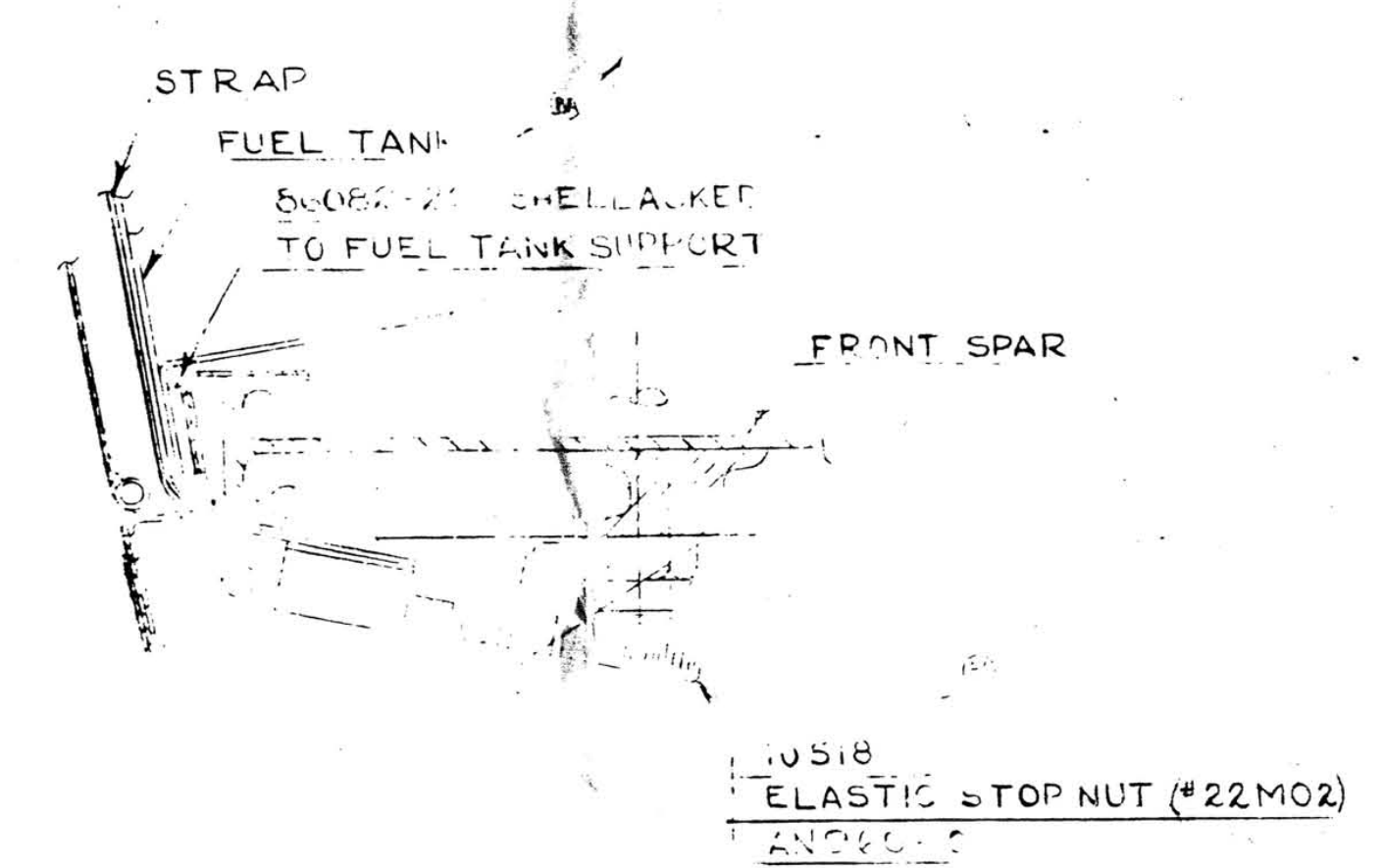
STRAP
FUEL TANK
86082-26 SHELLACKED TO FUEL TANK SUPPORT
FRONT SPAR
10518
ELASTIC STOP NUT (#22M02)

SECTION C-C

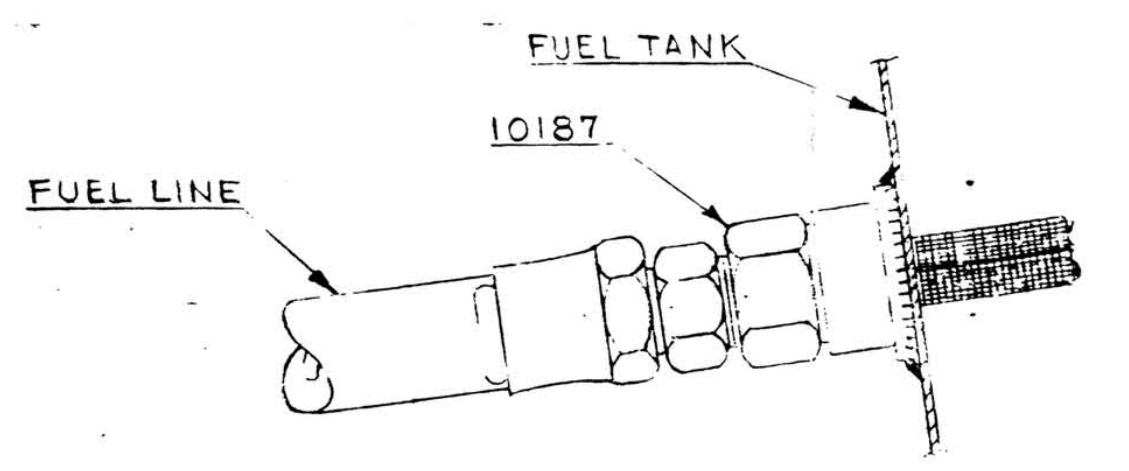
FUEL TANK
10187
FUEL LINE

FIG. 8
FUEL LINE CONNECTION
FULL SIZE

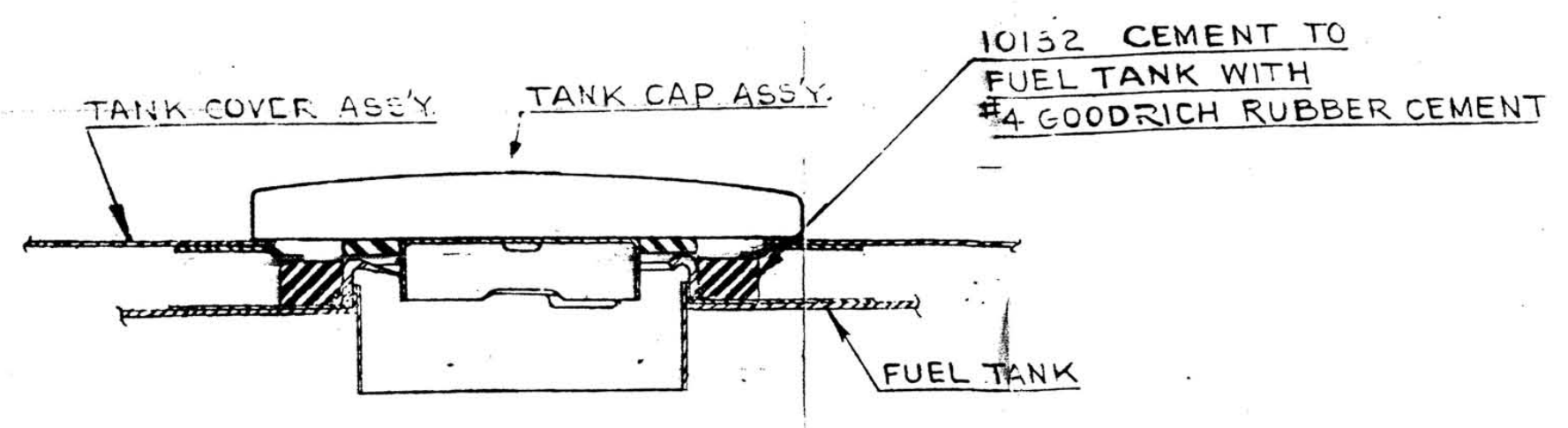
TANK COVER ASS'Y.
TANK CAP ASS'Y.
10132 CEMENT TO FUEL TANK WITH #4 GOODRICH RUBBER CEMENT
FUEL TANK

SECTION D-D
FULL SIZE

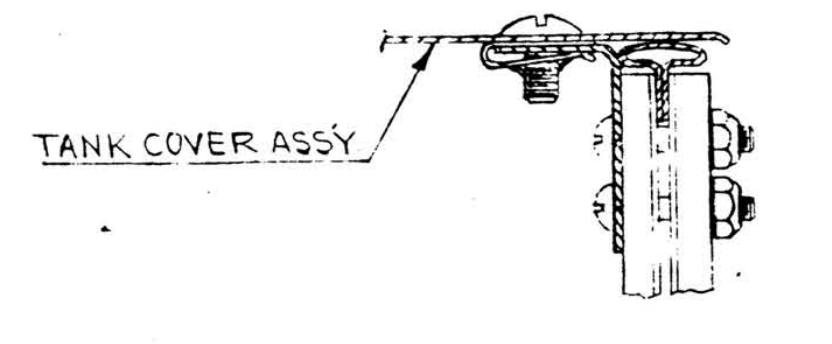
TANK COVER ASS'Y

SECTION E-E
FULL SIZE

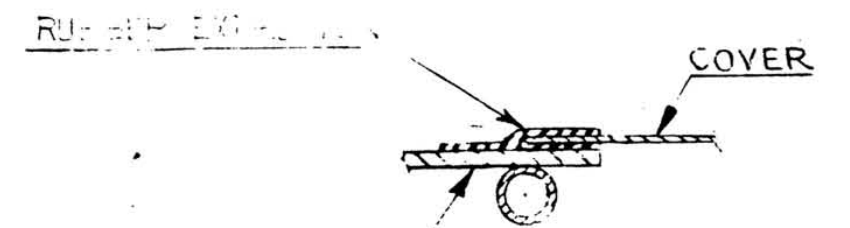
COVER
WINDSHIELD

SECTION F-F
FULL SIZE

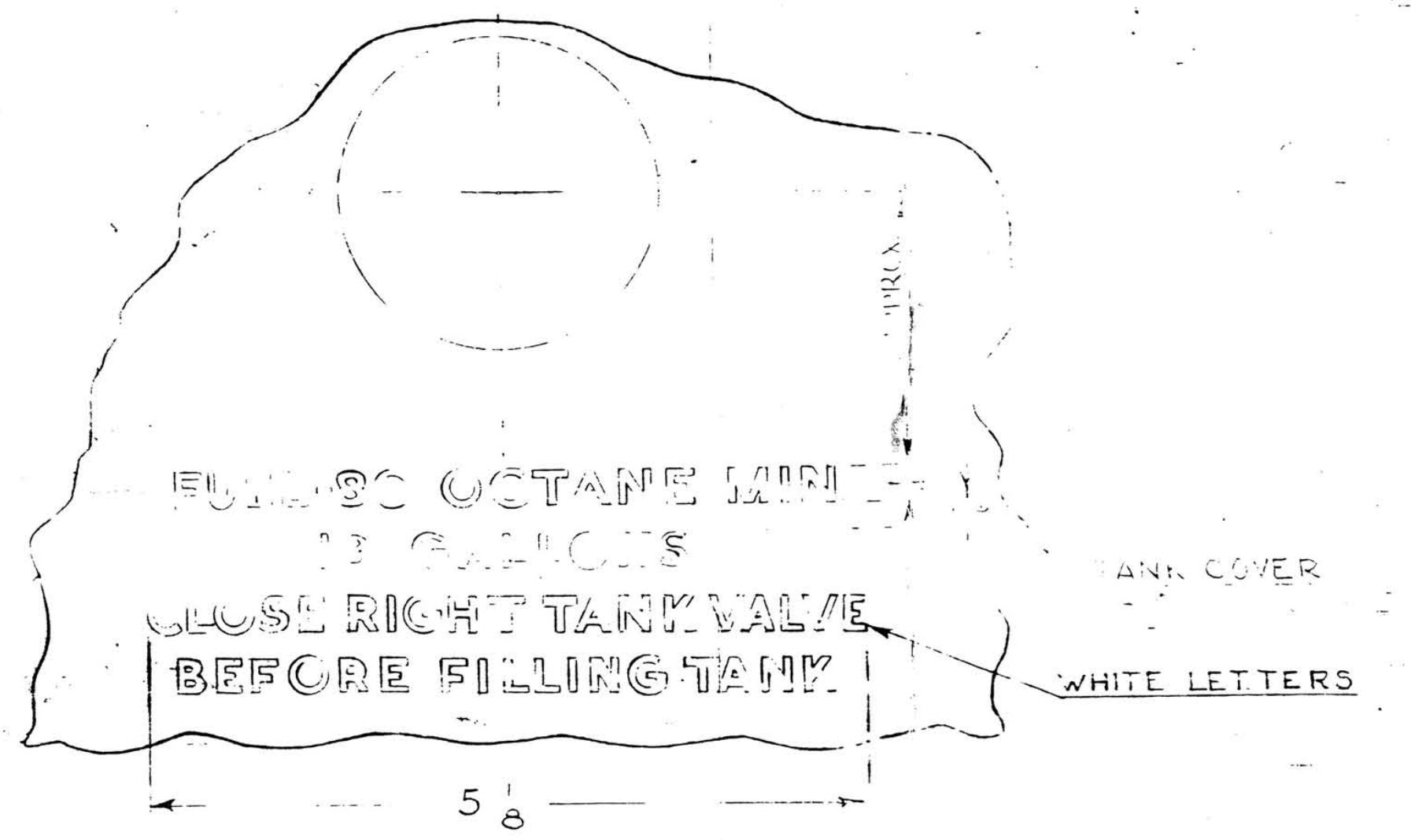
FUEL 80 OCTANE MIN.
19 GALLONS
CLOSE RIGHT TANK VALVE
BEFORE FILLING TANK
TANK COVER
WHITE LETTERS
5 1/8

FIG. 9
LETTERING DETAIL
FULL SIZE

NOTES:
1. TURNBUCKLES SAFETIED WITH .040 SAFETY WIRE. NOT MORE THAN TWO THREADS SHOULD BE VISIBLE AT EACH END OF TURNBUCKLE BARREL.
2. "A"+"B" MUST NOT EXCEED 3/32. WHEN EITHER "A" OR "B" EXCEEDS 1/32, SHIM WITH WASHERS AN960-516L TO SUIT.
3. WHERE "SEE NOTE 3" IS INDICATED, ELASTIC STOP NUT (TYPES 22 M OR 42E) MAY BE USED.
4. IN CASE EITHER AILERON HAS A TENDENCY TO FLOAT UP, TRIM WITH TAB AS SHOWN.

PART No.	No. REQ.	SIZE	DESCRIPTION / MATERIAL
	1	.040 x 36	BRASS SAFETY W
	1	.032 x 5	
#10-32	3	[illegible]	[illegible] STL. CAD PLATED [illegible] HD MACH [illegible]
[illegible]	1		[illegible] (SEE NOTE 2)
	2	TANK CAP	BADGER CAP #610 PURCH BADGER TOOL CO.
	12	TINNERMAN NUT #A1155-1024-1	
	20	ELASTIC STOP NUT #22M62	
	[illegible]	ELASTIC STOP NUT #22[illegible]	
#10-32	24	1/2 L.	#1010 STL. CAD. PLATED TRU HD. MACH. SCREW
#6-32	20	3/8 L.	#1010 STL. CAD. PLATED RD. HD. MACH. SCREW
#6	50	3/8	TYPE "A" STOVE HD. P.K. SCREW
#4	86	1/4	
AN960-516L	—	WASHER (SEE NOTE 2).	
AN960-516	6	WASHER.	
AN960-10	4		
AN931-14-20	2	GROMMET.	
AN380-2-2	11	COTTER PIN.	
AN310-5	4	NUT	
AN310-3	7		
AN5-17	2	BOLT	
AN5-16	2		
AN3-6	1		
AN3-5	6		
86082-26	4	FELT STRIP	
83161-2	2	HOSE.	
81262-4	2	LINK	
81262-5 OR 81262-3	1		
80122-49	2	WASHER.	
72101	2	HOSE ASS'Y.	
60451-1	1	FAIRING	
60451	1		
60441-1	1		
60441	1		
60361	2		
40123-19	1	CABLE ASS'Y.	
16531-2	1	WING ASS'Y.	
16531-1	1		
10377-1	1	FUEL TANK ASS'Y.	
10377	1		
10878	2	ACCESS PLATE	
10688-1	1	COVER	
10688	1		
10686	2	FLOAT ASS'Y.	
10676	2	GAGE ASS'Y.	
10518	4	STUD	
10187	2	STRAINER ASS'Y.	
10132	2	SEAL RING.	
10127	2	STRUT INST.	
10118-1	1	FUEL TANK COVER ASS'Y.	
10118	1		

SCALE 1 IN = 1 FT. & NOTED. TOTAL WT.-LBS.
FINISH-PIPER SPECIFICATION #10
MANUFACTURING PRACTICES-PIPER SPECIFICATION #9

"This drawing is the property of the Piper Aircraft Corp. and its possession by unauthorized persons shall not be construed as permission to reproduce for sale, in whole or in part, any devices shown thereon."

LTR	REVISION	DATE	BY
BF	11253, SEC K-K, NOTE 4 ADDED	3-22-48	RM
BE	TANK CAP WAS 10188	5-29-47	RC
BD	10467 REM.	4-25-47	CLW
BC	10016-14, 84702-19 & 86082-21 R	4-25-47	CLW
BB	10377 & 10377-1 WAS 11000 & 1100	4-25-47	CLW
BA	86082-26, 10518 & ATTACH. A	4-25-47	CLW
AZ	FIG. 9 & SEC. C-C ADDED	4-25-47	CLW
AY	RUBBER EXT. & ATTACH. RE	4-25-47	CLW
AX	FIG. 7 & SEC. G-G REM.	4-25-47	CLW
AW	REDRAWN & REVISED	3-20-47	JEH

MODEL	PER PLANE	NEXT ASSEMBLY	SUPERSEDES	SUP. BY

PIPER AIRCRAFT CORP.
LOCK HAVEN, PENNA.

WING INSTALLATION

DRAFTSMAN	CHECKER	STANDARDS
J.E.H. 3-20-47	R.D.M. 3-20-47	

10185